IG-80

外形尺寸 & 馬達齒鉚合尺寸 / Appearance Size & Pinion Assembly Dimension

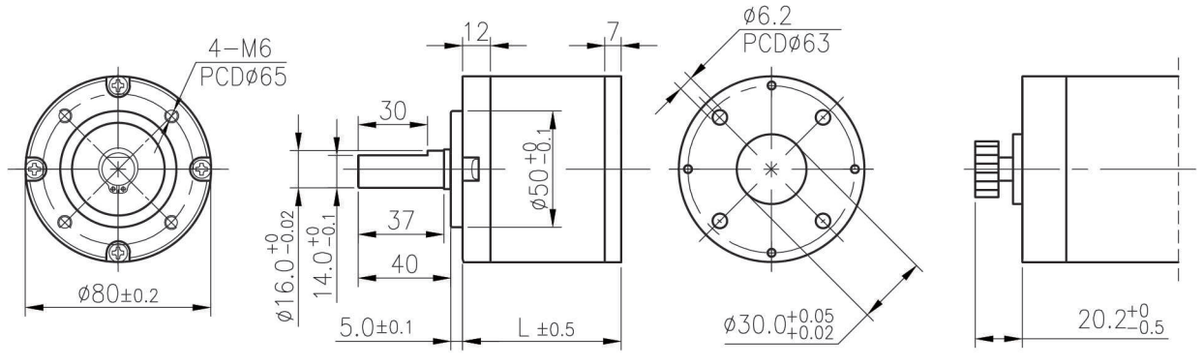

unit:mm

產品規格/ Product Specifications

外殼材質 Housing material	輸出軸承型式 Output shaft bearing	徑向負荷 Radial load (10mm from flange)	軸向負荷 Shaft axial load	主軸承受壓入力 Shaft press fit force	徑向間隙 Radial play of shaft	軸向間隙 Thrust play of shaft	背隙 (無負荷時) Backlash, at no-load
金屬 Metal	滾珠軸承 Ball bearings	≤ 30 kgf	≤ 10 kgf	≤ 75 kgf	≤ 0.08 mm	≤ 0.4 mm	≤ 3 ˚

馬達齒輪型式/ Pinion Specifications

模數 Module	齒數 No. of teeth	壓力角 Pressure angle	孔徑 (mm) Hole diameter	減速比 Reduction ratio
1.0	13	20 ˚	▢ ø6X4.5	1/19, 1/21, 1/71, 1/80, 1/103, 1/117, 1/306 1/393, 1/445, 1/571, 1/647
1.0	21	20 ˚	▢ ø10X8	1/4, 1/13, 1/15, 1/49, 1/55, 1/186, 1/210

標準減速比型式/ Gearboxes Specifications

減速比 Reduction ratio	1/4	1/13	1/15	1/19	1/21	1/49	1/55	1/71	1/80	1/103	1/117	1/186	1/210	1/306	1/393	1/445	1/571	1/647
定格容許扭力 (kgf-cm max.) Rated tolerance torque	15	70	70	70	70	125	125	125	125	125	125	125	125	125	125	125	125	125
瞬間容許扭力 (kgf-cm) Max momentary tolerance torque	45	210	210	210	210	375	375	375	375	375	375	375	375	375	375	375	375	375
效率 Efficiency	80%	70%	70%	70%	70%	60%	60%	60%	60%	60%	60%	50%	50%	50%	50%	50%	50%	50%
長度 Length (L)	52.3	68.8	68.8	68.8	68.8	85.3	85.3	85.3	85.3	85.3	85.3	101.8	101.8	101.8	101.8	101.8	101.8	101.8
重量 (滾珠軸承) Weight (g) /Ball bearings	1200	1650	1650	1650	1650	2100	2100	2100	2100	2100	2100	2550	2550	2550	2550	2550	2550	2550

- 使用相對溼度：20%~85%RH
  Operating relative humidity
- 使用溫度範圍：-10℃~+60℃
  Operating temperature range